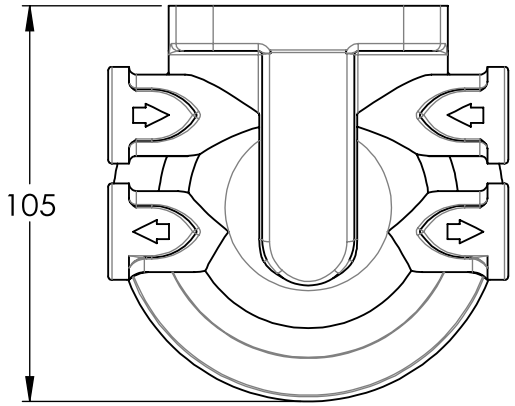


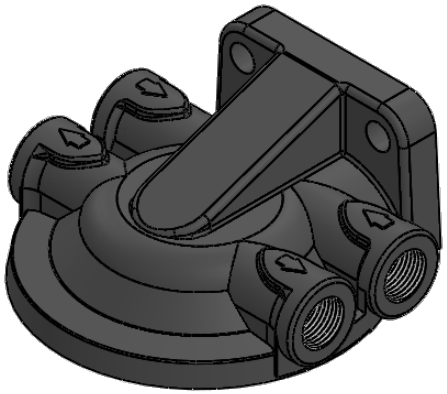

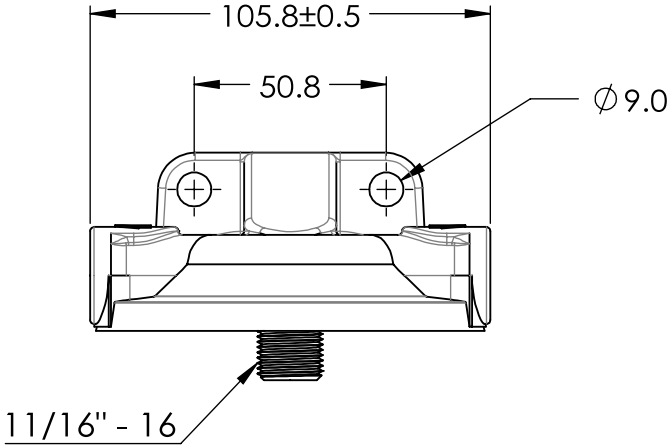


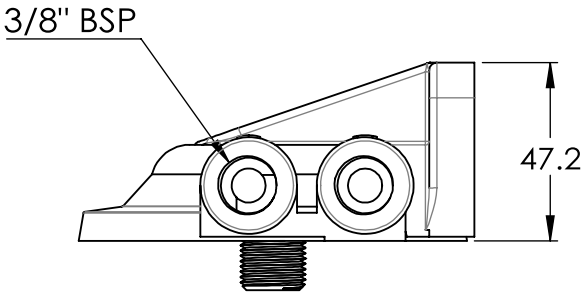


| | | | | | |
|---|---|---|---|---|---|
| | Aluminum | | | | |
| | Powder Coated | | | | Powder Coated Aluminum Filter Mounting Head |